Copyright © WSP USA Inc. All Rights Reserved.

HAWTHORNE TRAILHEAD AND NATURE PLAY AREA

PLANS FOR THE CONSTRUCTION OF THE HAWTHORNE TRAILHEAD PARKING LOT IMPROVEMENTS AND NATURE PLAY PLAY AREA DONALD L. ROBERTSON PARK

LOCATION MAP

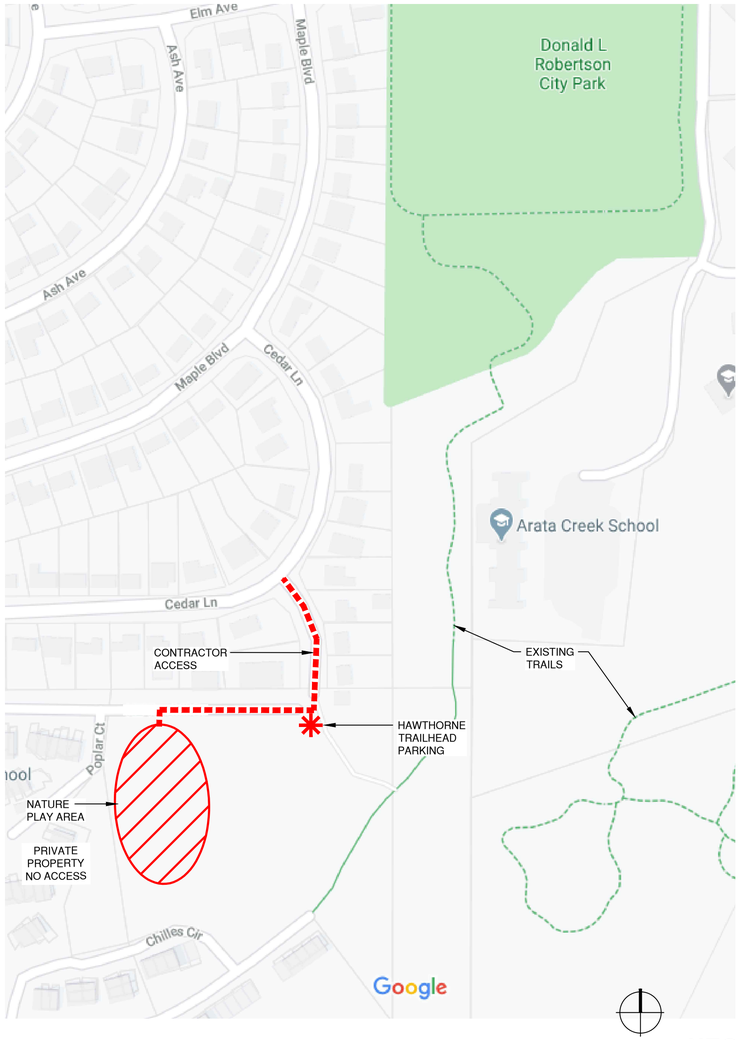

NORTH

NTS

VICINITY MAP

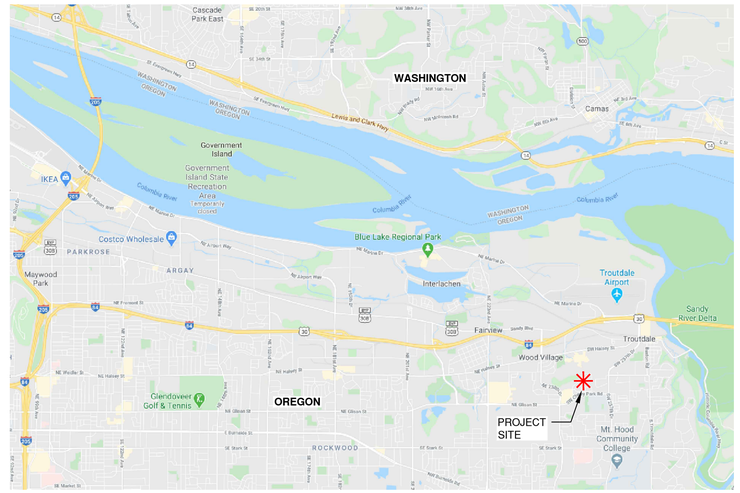

SHEET INDEX

GENERAL

G1-00	COVER SHEET
G1-01	GENERAL NOTES AND TREE PROTECTION
G1-02	EXISTING CONDITIONS AND DEMOLITION PLAN

PLAYSCAPE AND MATERIALS PLAN

L-100	PLAYSCAPE AND MATERIALS PLAN
L-101	NATURE PLAY AREA GRADING AND LAYOUT PLAN
L-102	NATURE PLAY AREA CROSS-SECTION
L-103	PARKING AREA GRADING AND LAYOUT PLAN
L-104	SITE DETAILS - SHEET 1
L-105	SITE DETAILS - SHEET 2
L-106	SITE DETAILS - SHEET 3
L-107	SITE DETAILS - SHEET 4
L-108	SITE DETAILS - SHEET 5

LANDSCAPE

L-200	PLANT SCHEDULE AND NOTES
L-201	LANDSCAPE PLAN
L-202	LANDSCAPE DETAILS

IRRIGATION

L-300	IRRIGATION NOTES
L-301	IRRIGATION PLAN
L-302	IRRIGATION DETAILS

SITE INFORMATION

ADDRESS: DONALD L. ROBERTSON PARK
WOOD VILLAGE, OR

PROJECT CONTACTS

OWNER:
CITY OF WOOD VILLAGE,
PUBLIC WORKS DEPARTMENT
23335 NE HALSEY
WOOD VILLAGE OR 97060-2812
PROJECT MANAGER: JOHN NIIYAMA
PHONE: 503-489-6857

LANDSCAPE ARCHITECT:
WSP, USA
210 E. 13TH STREET, SUITE 300
VANCOUVER, WA 98684
CONTACT: DAVID SACAMANO
PHONE: (360) 823-6117

SURVEY:
WESTLANK CONSULTANTS, INC.
PACIFIC CORPORATION CENTER
15115 SW SEQUOIA PARKWAY, SUITE 150
CONTACT: DOUGLAS LILES
PHONE: (503) 684-0652

DOCUMENT AMMENDED BY CITY OF WOOD VILLAGE FROM ORIGINAL. CONTAINS SHEETS G-101, G-102. L-103, L -104. INCLUDES ADDITIONAL DESIGN SPECIFICATIONS FOR CONCRETE AND MASONRY COLUMNS AND GATE SUPPORTS (SEE FINAL PAGE).

ABBREVIATIONS

&	AND
@	AT
AC	ASPHALT CONCRETE
AD	AREA DRAIN
ADA	AMERICANS WITH DISABILITIES
AL	ALIGNS(S)(ED)
ALT	ALTERNATIVE
APPROX.	APPROXIMATE
ARCH	ARCHITECT
AVG	AVERAGE
B&B	BALLED AND BURLAPPED
BC	BOTTOM OF CURB
BF	BOTTOM OF FOOTING
BM	BENCHMARK
BLDG	BUILDING
BO	BOLLARD
BOC	BACK OF CURB
BOS	BOTTOM OF SLOPE
BOSW	BOTTOM OF SWALE
BOW	BACK OF WALK
BR	BOTTOM OF RAMP
BS	BOTTOM OF STEP
BST	BOTTOM OF STAIR
BW	BOTTOM OF WALL
CAL	CALIPER
CB	CATCH BASIN
CF	CUBIC FEET
CHAM	CHAMFER
CIP	CAST IN PLACE
CJ	CONTROL JOINT
CL	CENTERLINE
CLR	CLEARANCE
CM	CENTIMETER
CMU	CONCRETE MASONRY UNIT
CO	CLEANOUT
COMP	COMPACTED
CONC	CONCRTE
CONST	CONSTRUCTION
CONT	CONTINUOUS
CONTR	CONTRACTOR
CP	CONTROL POINT
CU	CUBIC
CY	CUBIC YARD
D/W	DRIVEWAY
DBH	DIAMETER AT BREAST HEIGHT
DEMO	DEMOLISH
	DEMOLITION
DIA	DIAMETER
DIM	DIMENSION
DN	DOWN
DS	DOWNSPOUT
DTL	DETAIL
DWG	DRAWING
E	EAST
EA	EACH
EJ	EXPANSION JOINT
EL	ELEVATION
ELEC	ELECTRICAL
ENG	ENGINEERING
EOP	EDGE OF PAVEMENT
EQ	EQUAL
EQUIP	EQUIPMENT
EST	ESTIMATE
EW	EACH WAY
EX	EXISTING
EXP	EXPANSION, EXPOSED
FDC	FIRE DEPARTMENT CONNECTION
FFE	FINISH FLOOR ELEVATION
FG	FINISH GRADE
FH	FIRE HYDRANT
FI	FINISH
FL	FLOWLINE
FND	FOUNDATION
FOB	FACE OF BUILDING
FOC	FACE OF CURB
FOP	FACE OF PLANTER WALL
FOW	FACE OF WALL
FP	FENCE POST
FS	FINISHED SURFACE
FT	FEET
	FOOT
FTG	FOOTING
G	GUTTER
GA	GUAGE
GALV	GALVANIZED
GB	GRADE BREAK
GEN	GENERAL
GL	GAS LINE
GP	GATE POST
GV	GATE VALVE
HCP	HANDICAP PARKING SPACE
HORIZ	HORIZONTAL
HP	HIGH POINT
HT	HEIGHT
ID	INSIDE DIAMETER
IE	INVERT ELEVATION
IJ	ISOLATION JOINT
IN	INCH(ES)
INC	INCLUDE(ED)
INV	INVERT
IRR	IRRIGATION
JNT	JOINT
L	LENGTH
LP	LIGHT POLE
LB	POUND
LBS	POUNDS
LOW	LIMIT OF WORK
MTL	MATERIAL
MAX	MAXIMUM
MEMB	MEMBRANE
MH	MANHOLE
MIN	MINIMUM
MISC	MISCELLANEOUS
N	NORTH
NIC	NOT IN CONTRACT
NO	NUMBER
NOM	NOMINAL
NTS	NOT TO SCAPE
OC	ON CENTER
OD	OUTSIDE DIMATER
OF	OUTFALL
OPP	OPPOSITE
OVH	OVERHEAD
OW	OVERHEAD WIRE
P/L	PROPERTY LINE
PA	PLANTING AREA
PAR	PARALLEL
PC	POINT OF CURVATURE
PCR	POINT OF CURB RETURN
PED	PEDESTRIAN
PERF	PERFORATED
PI	POINT OF INTERSECTION
PO	POINT OF ORIGIN
POC	POINT OF CONNECTION
PP	POWER POLE
POT	POINT OF TANGENCY
PT	POINT
PUE	PUBLIC UTILITY EASEMENT
PVC	POLYVINYL CHLORIDE
PVMT	PAVEMENT
PVR	PAVER
PVT	PRIVATE
PWR	POWER RISER
QTY	QUANTITY
R	RADIUS/RADII
RD	ROOF DRAIN
REF	REFERENCE
REINF	REINFORCED
REQD	REQUIRED
REV	REVISIONS/REVISED
RP	RADIUS POINT
RIM	RIM
ROW	RIGHT OF WAY
RT	RIGHTS
S	SLOPE
	SOUTH
SCH	SCHEDULE
SD	STORM DRAIN
SDMH	STORM DRAIN MANHOLE
SEC	SECTION
SF	SQUARE FOOT/FEET
SHT	SHEET
SIM	SIMILIAR
SPEC	SPECIFICATION
SQ	SQUARE
SS	SANITARY SEWER
SSMH	SANITARY SEWER MANHOLE
ST	STREET
STA	STATION
STD	STANDARD
STL	STEEL
STRL	STRUCTURAL
STRM	STORM
SW	SIDEWALK
SWF	STORMWATER FACILITY
SY	SQUARE YARD
SYM	SYMMETRICAL
T	TANGENT
TC	TOP OF CURB
TD	TRENCH DRAIN
TF	TOP OF FOOTING
TG	TOP OF GRADE
TOC	TOP OF CONCRETE
TOPO	TOPOGRAPHY
TOS	TOP OF SLOPE
TP	TOP OF PAVEMENT
TRANS	TRANSFORMER
TR	TOP OF RAMP
TS	TOP OF STAIR/STEP
TSD	TOP OF STRUCTURAL DECK
TSL	TOP OF SLAB
TW	TOP OF WALL
TYP	TYPICAL
UG	UNDERGROUND
UGE	UNDERGROUND ELECTRICAL
UNO	UNLESS NOTED OTHERWISE
V	VERTICAL
VAR	VARIES
VERT	VERTICAL
VOL	VOLUME
W/	WITH
W/O	WITHOUT
W	WATER
	WIDE/WIDTH
	WEST
WCR	WHEEL CHAIR RAMP
WD	WIDE/WIDTH
WM	WATER METER
WT	WEIGHT
WV	WATER VALVE
WWM	WELDED WIRE MESH
X	BY
YD	YARD

100% SUBMITTAL

811 Know what's below. Call before you dig.

CITY OF Wood Village

PUBLIC WORKS

WSP USA Inc.
210 East 13th Street Ste 300
Vancouver, WA 98660-3231
FAX: 360-823-6101
TEL: 360-823-6100

REGISTERED 427 DAVID J. SACAMANO OREGON 05/14/99 LANDSCAPE ARCHITECT

HAWTHORNE TRAILHEAD & NATURE PLAYGROUND

COVER SHEET

DESIGNED:	JBR
REVIEWED:	DJS
DATE:	7/21/2020
	1 OF 18
	G-100

Last Saved by: USJBR97258/61 on: Dawn 5,2020 8:17 PM FileID: Q:\Arcnouver\2019\93001\0080\CAD\00\Wgs\S3Sj.g41.00.dwg REVISED.dwg

GENERAL NOTES

1. ALL CONSTRUCTION SHALL BE IN ACCORDANCE WITH THE CITY OF WOOD VILLAGE CODE (CWV) AND STREET AND ROAD STANDARDS (CVWSRS).
2. BEFORE ANY CONSTRUCTION OR DEVELOPMENT ACTIVITY, A PRECONSTRUCTION MEETING MUST BE HELD BETWEEN THE DEPARTMENT OF PUBLIC WORKS, CONSTRUCTION INSPECTORS, ENGINEERING CONSULTANT, AND THE CONTRACTORS.
3. A COPY OF THESE APPROVED PLANS MUST BE ON THE JOB SITE WHENEVER CONSTRUCTION IS IN PROGRESS.
4. PER CITY MUNICIPAL CODE, CONSTRUCTION NOISE SHALL BE LIMITED TO 7 A.M. TO 7 P.M., MONDAY THROUGH FRIDAY. THE CONTRACTOR MAY REQUEST A VARIANCE THROUGH PUBLIC WORKS TO PERFORM WORK OUTSIDE OF THESE TIMES.
5. IT SHALL BE THE APPLICANT'S/CONTRACTOR'S RESPONSIBILITY TO OBTAIN ALL CONSTRUCTION EASEMENTS AND/OR RIGHT OF ENTRIES PRIOR TO CONSTRUCTION WORK.
6. DATUM SHALL BE DATUM NVAD 1988 UNLESS OTHERWISE APPROVED.
7. ALL UTILITY TRENCHES SHALL BE BACKFILLED AND COMPACTED TO 95 PERCENT MAXIMUM DENSITY AS DETERMINED BY AASHTO T-99, WITHIN THE ROADWAY PRISM.
8. THE CONTRACTOR SHALL BE RESPONSIBLE FOR PROVIDING ADEQUATE SAFEGUARDS, SAFETY DEVICES, PROTECTIVE EQUIPMENT, FLAGGERS, AND ANY OTHER NEEDED ACTIONS TO PROTECT THE LIFE, HEALTH, AND SAFETY OF THE PUBLIC, AND TO PROTECT PROPERTY IN CONNECTION WITH THE PERFORMANCE OF WORK COVERED BY THE CONTRACTOR. ANY WORK WITHIN THE TRAVELED RIGHT-OF-WAY THAT MAY INTERRUPT NORMAL TRAFFIC FLOW SHALL REQUIRE AT LEAST ONE FLAGGER FOR EACH LANE OF TRAFFIC AFFECTED.
9. NO GROUND DISTURBING ACTIVITIES SHALL TAKE PLACE WITHIN THE 50' RIPARIAN SETBACK AREA.

DEMOLITION NOTES

1. DEMOLITION REQUIREMENTS ARE SHOWN DIAGRAMMATICALLY ON THESE DRAWINGS. THESE DRAWINGS DO NOT SHOW EVERY SITE ELEMENT THAT MAY NEED TO BE REMOVED.
2. CONTRACTOR IS RESPONSIBLE FOR WITH COORDINATING WITH OWNER FOR EXAMINATION OF EXISTING SITE CONDITIONS FOR ESTABLISHING SCOPE OF DEMOLITION WORK.
3. ALL AREAS OF GROUND DISTURBED SHALL BE COVERED WITH WEED-FREE STRAW.
4. SEE PLANS FOR DETAILS AND NOTES ON TREE REMOVAL, PROTECTION, AND RELOCATION.

LEGEND

Symbol	Description
	CORS STATION AS NOTED
	FOUND SECTION CORNER AS NOTED
	FOUND MONUMENT AS NOTED
S	SANITARY SEWER MANHOLE
D	STORM SEWER MANHOLE
	CATCH BASIN CENTER
>	CATCH BASIN CENTER
	WATER VALVE
WM	WATER METER
	FIRE HYDRANT
	UTILITY POLE
UR	UTILITY VAULT
	GATE POST
	SIGN
OH	OVERHEAD LINES
SS	UNDERGROUND SANITARY SEWER LINE
SD	UNDERGROUND STORM DRAIN LINE
W	UNDERGROUND WATER LINE
G	UNDERGROUND GAS LINE
X X	FENCE AS NOTED
	EDGE OF PAVEMENT
	FLOWLINE OF ARATA CREEK
	TREE DRIP LINE
	BARK CHIP PATH/PILE
	BUILDING FOOTPRINT LINE
12"	TREE STUMP
12"	DECIDUOUS TREE
42"	EVERGREEN TREE
	CONCRETE
	GRAVEL
CONC.	CONCRETE
DWY	DRIVEWAY
CBC	CATCH BASIN (CENTER)
SAMH	SANITARY SEWER MANHOLE
SDMH	STORM SEWER MANHOLE
TW	TOP OF WALL GRADE
EC	FLOWLINE GRADE (CURB/CREEK)
FL	FLOWLINE GRADE (CURB/CREEK)
TFC	TOP FACE OF CURB GRADE
IE	INVERT ELEVATION

UTILITY INFORMATION

STORM SEWER UTILITIES

STORM SEWER MANHOLE #3387
RIM=160.21'
IE OUT (36",E) 149.1'
IE IN (36",W) 149.2'

STORM MANHOLE #4205
RIM=163.86'
IE OUT (12",E) 158.7'
IE IN (12",W) 158.8'
IE IN (12",S) 158.9'

STORM MANHOLE #4312
RIM=166.73'
IE OUT (12",N) 158.7'
IE IN (12",SW) 158.7'
IE IN (12",SE) 159.9'

CATCH BASIN #4315
RIM=164.04'
IE OUT (12",NE) 163.5'

CATCH BASIN #4202
RIM=163.71'
IE OUT (12",SW) 163.2'

WELL/MANHOLE (UNABLE TO OPEN)

SANITARY SEWER MANHOLES

SANITARY MANHOLE #3388
RIM-164.18'
IE OUT (8",N) 159.9'
IE IN (8",S) 160.0'

SANITARY MANHOLE #3386
RIM=159.99'
IE OUT (6",E) 156.7'
IE IN (6",W) 156.8'

CLEARING AND GRADING & EROSION CONTROL

GENERAL

THESE STANDARDS ARE INTENDED TO BE THE MINIMUM DESIGN STANDARDS FOR CLEARING, GRADING AND EROSION CONTROL. SPECIAL SITE CONDITIONS AND ENVIRONMENTAL CONSTRAINTS MAY REQUIRE A GREATER LEVEL OF PROTECTION. THE DESIGNER MUST KEEP THESE ADDITIONAL CONSTRAINTS IN MIND AND APPLY FURTHER PROFESSIONAL JUDGMENT TO PROTECT THE HEALTH, SAFETY AND WELFARE OF THE PUBLIC.

LAND ALTERATION ACTIVITIES ARE THOSE WHICH ARE COMMONLY REFERRED TO AS CLEARING, GRUBBING, EXCAVATION, FILLING, GRADING, STOCKPILING OR STABILIZING. ANY OR ALL OF THESE MAY REQUIRE SECONDARY CONTAINMENT MEASURES SUCH AS DESILTING PONDS AND SEDIMENT TRAPS AND PERIMETER DIKES, ETC.

SEASONAL LIMITATIONS

A. WHEN GRADING OR LAND ALTERATION ACTIVITIES ARE INTERRUPTED BY HEAVY RAIN, OPERATION SHALL NOT BE RESUMED UNTIL THE CITY DETERMINES THAT ALL EROSION CONTROL FACILITIES ARE OPERATING SATISFACTORILY.
B. NO SOILS SHALL REMAIN EXPOSED LONGER THAN NECESSARY FROM OCTOBER 1ST THROUGH APRIL 30TH .
C. NO EARTHWORK OR GRADING ACTIVITIES SHALL TAKE PLACE ON SLOPES GREATER THAN 25% BETWEEN OCTOBER 1ST AND MAY 1ST. THESE DATES MAY BE SHORTENED OR EXTENDED BY THE DIRECTOR OF PUBLIC WORKS.

TEMPORARY EROSION/SEDIMENTATION CONTROL

A. PRIOR TO ANY CLEARING OR GRADING AN APPROVED EROSION CONTROL PLAN SHALL BE INSTALLED. THIS PLAN WIL L INDICATE, AT A MINIMUM, VEHICLE ACCESS/CONSTRUCTION ENTRANCE, SEDIMENT FENCING, INLET BARRIERS, CLEARING LIMITS, SLOPE PROTECTION AND DITCH FACILITIES. ALL DEVELOPMENT ACTIVITIES PERFORMED BY LICENSED CONTRACTORS SHALL BE SUPERVISED BY AN INDIVIDUAL FORMALLY TRAINED AND CERTIFIED IN EROSION AND SEDIMENT CONTROL BY A RECOGNIZED ORGANIZATION INSTRUCTING SUCH CLASSES.
B. ALL EROSION/SEDIMENTATION CONTROL FACILITIES SHALL BE MAINTAINED IN A SATISFACTORY AND EFFECTIVE CONDITION UNTIL PERMANENT DRAINAGE FACILITIES ARE OPERATIONAL AND APPROVED.
C. CONSTRUCTION ACCESS SHALL BE LIMITED TO ONE ROUTE. IT SHALL BE STABILIZED WITH ROCK TO MINIMIZE THE TRACKING OF MUD ONTO PUBLIC ROADWAYS. CONTRACTOR IS RESPONSIBLE FOR ALL SUBSEQUENT COSTS INCURRED FOR ROADWAY CLEANING.

SITE RESTORATION

A. VEGETATION SHALL BE RESTORED ON DISTURBED AREAS NOT COVERED BY PERMANENT IMPERVIOUS SURFACE IMPROVEMENTS AT THE EARLIEST POSSIBLE TIME CONSISTENT WITH APPROPRIATE PLANTING TIMES BY HYDROSEEDING, MULCHING OR OTHER CITY APPROVED METHODS.
B. IN NO CASE SHALL THE PERIOD BETWEEN LAND ALTERATION OPERATION AND COMPLETE, PERMANENT EROSION CONTROL AND VEGETATION PLANTING BE LONGER THAN ONE YEAR. THIS PLANTING SHALL RESTORE THE SITE TO A CONDITION EQUAL TO OR BETTER THAN THE PRE-CLEARED CONDITION TO THE EXTENT POSSIBLE. TEMPORARY EROSION CONTROL AND SEDIMENT CONTROL MEASURES SHALL BE MAINTAINED IN AN OPERATING CONDITION UNTIL THE SITE IS FULL STABILIZED.

NOTES:
1. BURY BOTTOM OF FILTER FABRIC 6" VERTICALLY BELOW FINISHED GRADE.
2. 2" X 2" FIR, PINE OR STEEL FENCE POSTS.
3. STITCHED LOOPS TO BE INSTALLED UPHILL SIDE OF SLOPE.
4. COMPACT ALL AREAS OF FILTER FABRIC TRENCH.
5. NO VARIANCES TO THE ABOVE ARE ALLOWED WITHOUT PRE-AUTHORIZATION FROM THE CITY.
6. ANGLE BOTH ENDS OF FILTER FABRIC FENCE TO ASSURE SOIL IS TRAPPED.

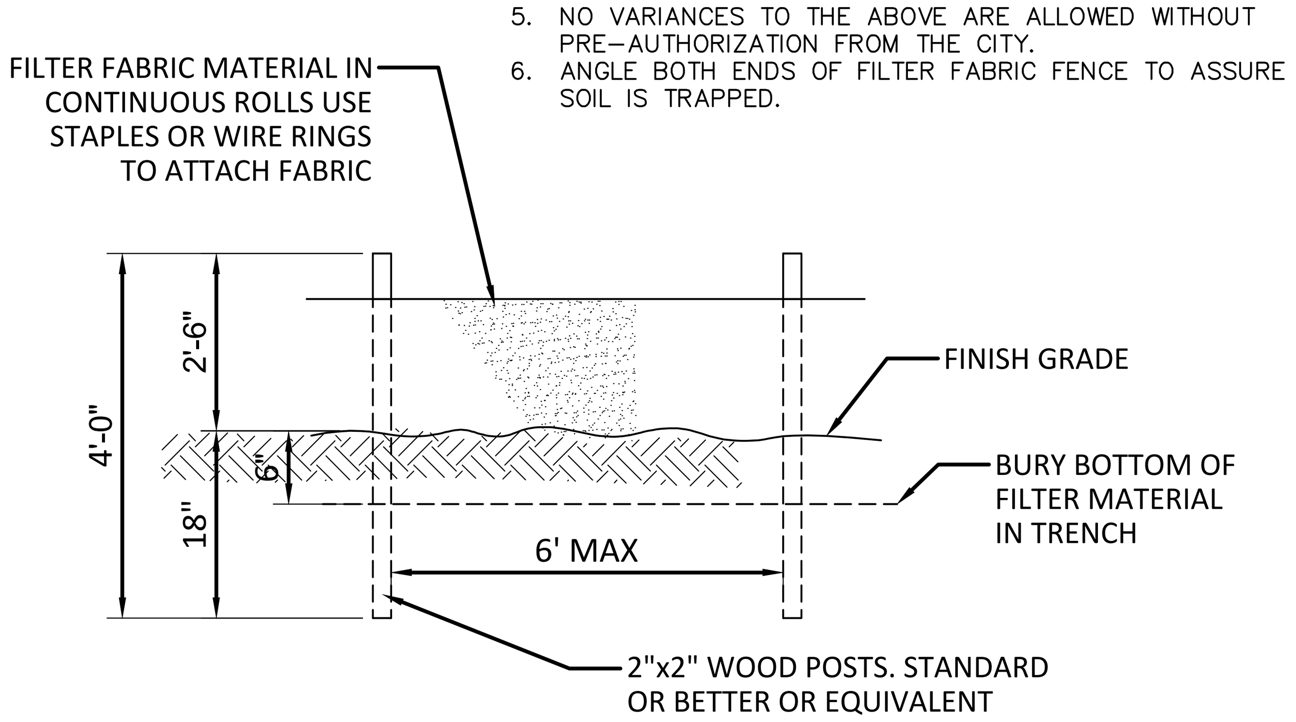

1 SILT FENCE
1/2" = 1'-0"

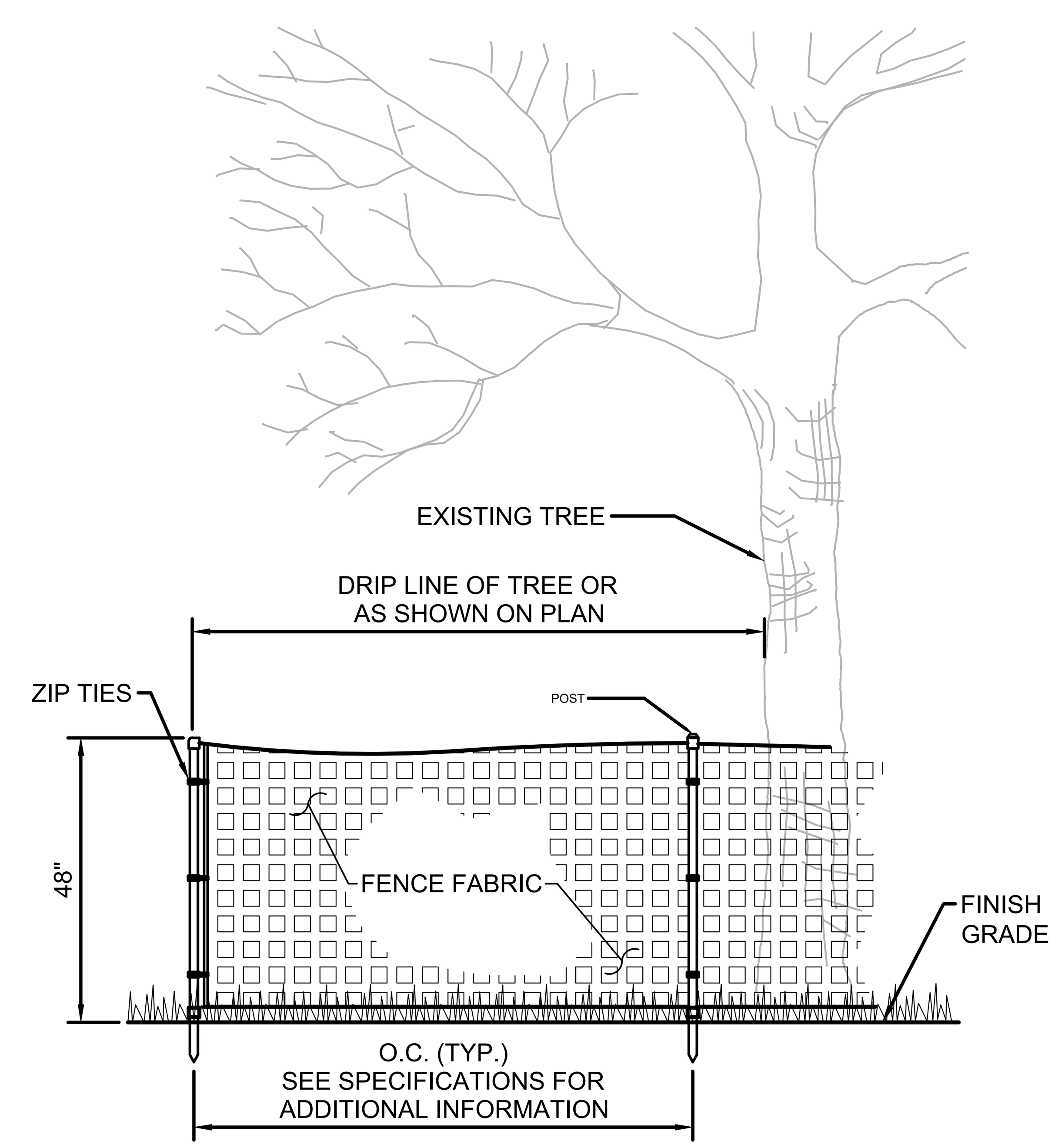

2 TREE PROTECTION FENCE
1/2" = 1'-0"

SURVEY NOTES

BASIS OF BEARING:

THE BASIS OF BEARING FOR THIS SURVEY WAS ESTABLISHED BETWEEN TWO (2) CORS STATIONS; WDBN, PID-DE6433, AND JIME PID-DN2111,

BASIS OF BEARING: N11°50'08"W (GRID BEARING)
GROUND DISTANCE BETWEEN SAID POINTS:
132122.891 FEET.
GRID DISTANCE BETWEEN SAID POINTS:
132111.278 FEET.

BASIS OF ELEVATION

THE BASIS OF ELEVATION FOR THIS SURVEY WAS ESTABLISHED FROM NGS BENCHMARK, Q-718, PID-RD1601.
ELEVATION: 68.52 FEET NAVD88
BEING A METAL ROD IN MONUMENT BOX.

UTILITY STATEMENT

THE UNDERGROUND UTILITIES SHOWN HAVE BEEN MAPPED FROM FIELD SURVEY INFORMATION, OBSERVED ABOVE GROUND EVIDENCE AND GROUND MARKINGS BY OTHERS, AND EXISTING DRAWINGS SUPPLIED BY OTHERS. THE SURVEYOR MAKES NO GUARANTEE THAT THE UNDERGROUND UTILITIES SHOWN COMPRISE ALL SUCH UTILITIES IN THE AREA, EITHER IN SERVICE OR ABANDONED. THE SURVEYOR FURTHER DOES NOT WARRANT THAT THE UNDERGROUND UTILITIES SHOWN ARE IN THE EXACT LOCATION INDICATED ALTHOUGH HE DOES CERTIFY THAT THEY ARE LOCATED AS ACCURATELY AS POSSIBLE FROM INFORMATION AVAILABLE. THE SURVEYOR HAS NOT PHYSICALLY LOCATED THE UNDERGROUND UTILITIES.

SURVEY REFERENCES

(1): SN 46179
(2): "TREEHILL PARK CONDOMINIUMS"
(3): "COTTONWOOD ESTATES CONDOMINIUMS"

DEED REFERENCES

(D1): BOOK 2506 PAGE 776 (RECORDED FEBRUARY 11, 1992)
(NO EASEMENT DOCUMENTS WERE PROVIDED)

SURVEY NOTES

1. FIELDWORK WAS COMPLETED ON NOVEMBER 2, 2019.
2. BOUNDARY RESOLUTION IS BASED ON SN 46179 AND THE PLAT OF "TREEHILL PARK CONDOMINIUMS".
3. LOCATE PAINT PROVIDED IN THIS AREA: "NO PGE".
4. TREE HILL PARK CONDOMINIUMS TOOL SHED ENCROACHMENT INTO SITE ACROSS WEST PROPERTY LINE CLAIMED BY TREE HILL PARK CONDOMINIUMS MAINTENANCE STAFF TO BE "GRAND-FATHERED IN". NO DOCUMENTS PROVIDED TO SUPPORT OR DENY CLAIM. DURATION OF ENCROACHMENT UNKNOWN. NO DOCUMENTS PROVIDED SUPPORTING CROSS USE OF ACCESS RELATED TO BARK CHIP PILES, ASPHALT ROADWAY, CURB AND UTILITIES ALONG WEST PROPERTY LINE AS SHOWN HEREON. DURATION OF ENCROACHMENT UNKNOWN.
5. POPLAR CT. AND NE TREEHILL DR. ARE INDICATED PER LOCAL SIGNS AND SHOWN ON COMMON MEDIA MAPPING (EXAMPLE: GOOGLE MAPS), NOT SEPARATELY PLATTED ON TREEHILL PARK CONDOMINIUMS AND NOT SHOWN ON TAX MAPS.
6. FENCES ALONG NORTH PROPERTY LINE VARY INTO AND OUT OF SITE AS SHOWN. OWNERSHIP AND DATE FENCE WAS ESTABLISHED ARE BOTH UNKNOWN.

PRELIMINARY

811 Know what's below. Call before you dig.

CITY OF Wood Village

PUBLIC WORKS

WSP USA Inc.
210 East 13th Street Ste 300
Vancouver, WA 98660-3231
FAX: 360-823-6101
TEL: 360-823-6100

STATE OF WASHINGTON · DAVID J. SACAMANO · LICENSED LANDSCAPE ARCHITECT · No. 927 Exp. 12/23/2019

HAWTHORNE TRAILHEAD & NATURE PLAYGROUND

LEGEND AND GENERAL NOTES

DESIGNED:	DES
DRAWN:	DRW
DATE:	7/21/2020
2 OF 13	
G-101	

Copyright © WSP USA Inc. All Rights Reserved.
Last Saved by: USJB675350 on: Dec 5, 2019 4:37 PM File: O:\Vancouver\2019\3160011\6000\CADD\Xref\xLSSheet.dwg

Copyright © WSP USA Inc. All Rights Reserved.

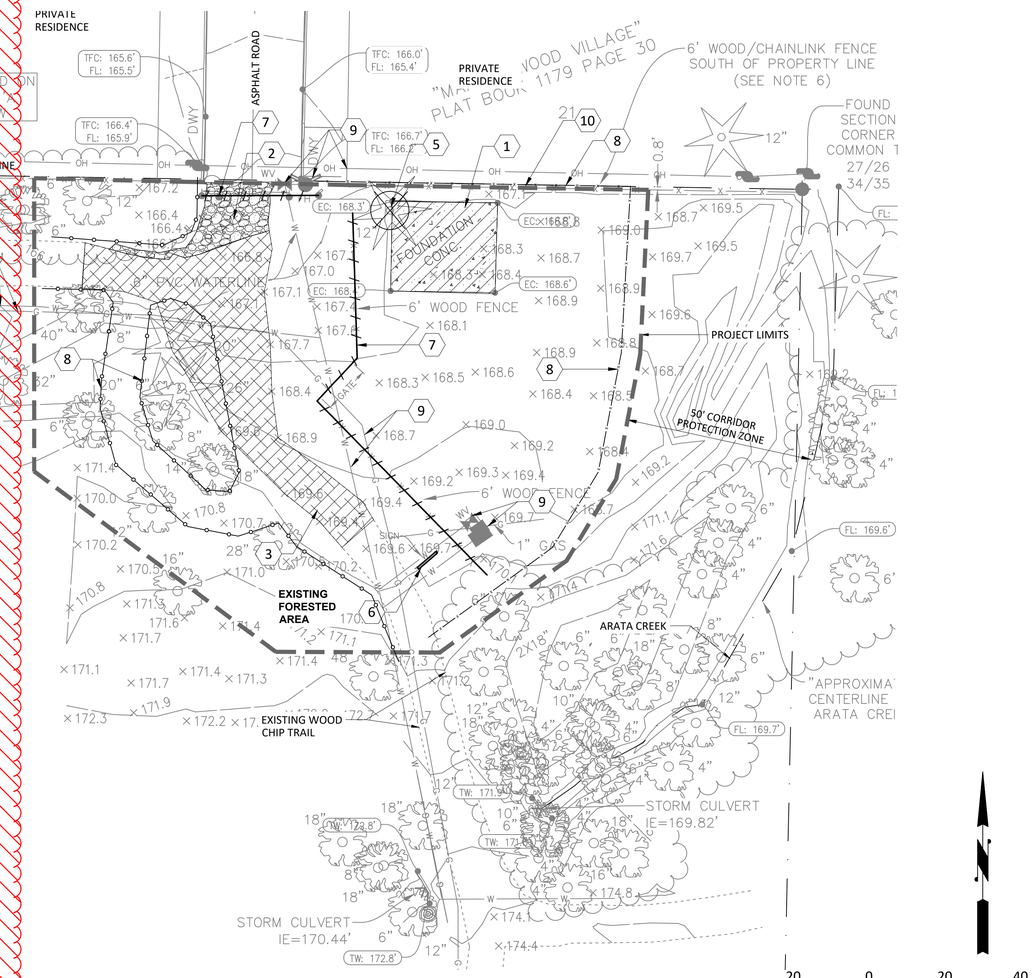

DEMOLITION KEY NOTES

1. REMOVE CONCRETE
2. REMOVE GRAVEL
3. REMOVE WOOD CHIP TRAIL
4. REMOVE YARD DEBRIS WASTE/STUMPS
5. REMOVE TREE
6. PROTECT EXISTING SIGN
7. REMOVE WOODEN FENCE/GATE
8. TREE PROTECTION/SILT FENCING
9. PROTECT EXISTING UTILITIES
10. PROTECT FENCE IN PLACE
11. CLEAR AND GRUB TRAIL PATH
12. PROTECT EXISTING CURB (REPAIRS AS NEEDED)
13. PROTECT EXISTING BASKETBALL HOOP

SHEET REFERENCE

1. REFER TO G-SHEETS FOR GENERAL CONSTRUCTION INFORMATION, EROSION CONTROL AND DEMOLITION NOTES.
2. REFER TO SHEET L-100 FOR NATURE PLAY AREA MATERIALS PLAN.
3. REFER TO SHEET L-101 TO L-103 FOR GRADING AND LAYOUT PLANS.
4. REFER TO SHEETS L-104 TO L-108 FOR MATERIALS AND SITE DETAILS.
5. REFER TO SHEET L-200 TO L-202 FOR PLANT SCHEDULE AND GENERAL NOTES, LANDSCAPE PLAN, AND LANDSCAPE DETAILS.
6. DESIGN BUILD IRRIGATION: REFER TO SHEETS L-300 TO L-302 FOR PERFORMANCE STANDARDS.

LEGEND

- EXISTING CONTOURS
- OVERHEAD POWER LINE
- GAS LINE
- WATER LINE
- TREE PROTECTION FENCING
- SILT FENCE

100% SUBMITTAL

811 Know what's below. Call before you dig.

CITY OF Wood Village

PUBLIC WORKS

WSP USA Inc.
210 East 13th Street Ste 300
Vancouver, WA 98660-3231
FAX: 360-823-6101
TEL: 360-823-6100

REGISTERED 427 DAVID J. SACAMANO OREGON 05/14/99 LANDSCAPE ARCHITECT

HAWTHORNE TRAILHEAD & NATURE PLAYGROUND

EXISTING CONDITIONS/DEMOLITION PLAN

DESIGNED:	JBR
REVIEWED:	DJS
DATE:	7/21/2020
	3 OF 18
	G-102

Last Saved by: USJB67534C on: Dec 5, 2018 4:37 PM - File: Q:\Vancouver\2019\316001\CADD\Xref\ALS\Sheet.dwg

Copyright © WSP USA Inc. All Rights Reserved.

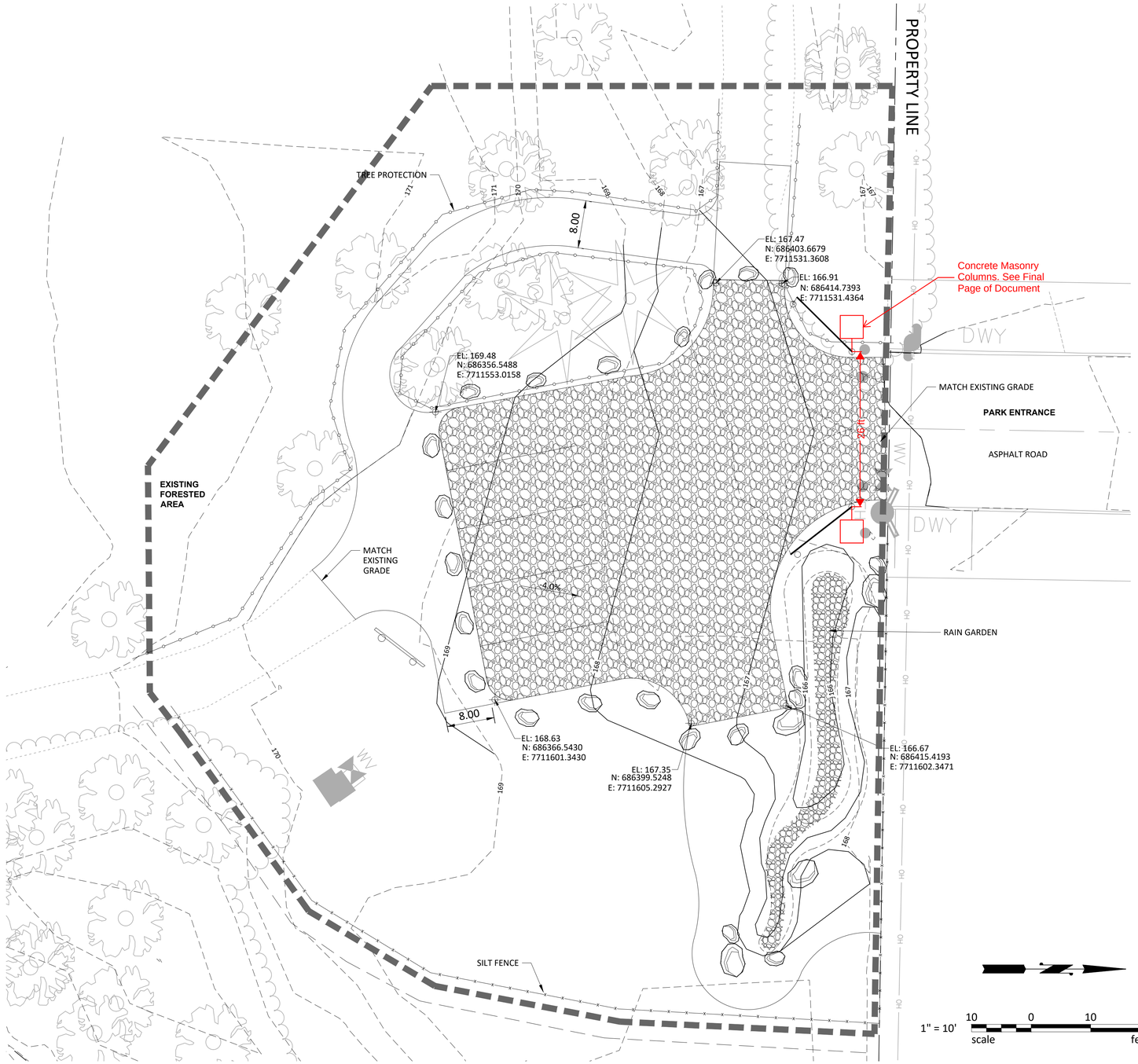

LEGEND

EXISTING FEATURES:

- EXISTING CONTOURS
- OH — OVERHEAD POWER LINE
- G — GAS LINE
- W — WATER LINE

PROPOSED FEATURES:

- 4" PERFORATED DRAIN PIPE (160 LF)
- TREE PROTECTION FENCING (1,252 LF)
- SILT FENCE (245 LF)
- MAJOR CONTOUR
- MINOR CONTOUR

GRADING NOTES

1. GRADING PLAN CONCEPTUAL IN NATURE.
2. NORTHING & EASTINGS ARE PROVIDED FOR INITIAL LAYOUT. CONTRACTOR TO FIELD FIT ALL PATHWAYS AND PLAY AREAS AFTER INITIAL STAKING AS NEEDED.
3. GRADES ON TRAILS NOT TO EXCEED SLOPE OF 4.5%
4. PERFORATED PIPE TO MAINTAIN POSITIVE DRAINAGE WITH MINIMUM SLOPE OF 1%. CONTRACTOR TO ADD ADDITIONAL PIPE IF NEEDED TO DRAIN ALL PLAY AREAS.
5. ALL QUANTITIES ARE APPROXIMATE AND PROVIDED FOR CONVENIENCE, CONTRACTOR TO FIELD VERIFY.
6. CONTRACTOR TO FIELD VERIFY DEPTH OF UTILITIES.

SHEET REFERENCE

1. REFER TO G-SHEETS FOR GENERAL CONSTRUCTION INFORMATION, EROSION CONTROL AND DEMOLITION NOTES.
2. REFER TO SHEET L-100 FOR NATURE PLAY AREA MATERIALS PLAN.
3. REFER TO SHEET L-101 TO L-103 FOR GRADING AND LAYOUT PLANS.
4. REFER TO SHEETS L-104 TO L-108 FOR MATERIALS AND SITE DETAILS.
5. REFER TO SHEET L-200 TO L-202 FOR PLANT SCHEDULE AND GENERAL NOTES, LANDSCAPE PLAN, AND LANDSCAPE DETAILS.
6. DESIGN BUILD IRRIGATION: REFER TO SHEETS L-300 TO L-302 FOR PERFORMANCE STANDARDS.

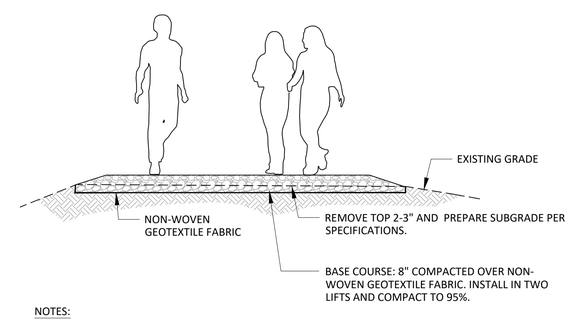

NOTES:

1. BASE COURSE CONSISTS OF COMPACTED 3/4"-0 CRUSHED ROCK.
2. SUBGRADE IS COMPACTED, SEE SPECIFICATIONS.
3. NO ADDITIONAL CURB CUT OR DRIVEWAY APPROACH IS NECESSARY.
4. WHILE A CURB CUT IS NOT NECESSARY, ALL ADDITIONAL PARKING AREAS MUST ORIGINATE FROM THE CURB LINE.
5. THESE STANDARDS APPLY TO ALL ADDITIONAL PARKING AREAS, NOT JUST THOSE CONTINUOUS TO A CURRENT DRIVEWAY.

1 GRAVEL PAVEMENT DETAIL
SCALE: NTS

100% SUBMITTAL

811 Know what's below. Call before you dig.

CITY OF Wood Village

PUBLIC WORKS

WSP USA Inc.
210 East 13th Street Ste 300
Vancouver, WA 98660-3231
FAX: 360-823-6101
TEL: 360-823-6100

REGISTERED 427 DAVID J. SACAMANO OREGON 05/14/99 LANDSCAPE ARCHITECT

HAWTHORNE TRAILHEAD & NATURE PLAYGROUND

PARKING AREA GRADING & LAYOUT PLAN

DESIGNED:	JBR
REVIEWED:	DJS
DATE:	07/21/2020
	7 OF 18
	L-103

Last Saved by: USJB675350 on: Dec 5, 2019 4:37 PM File: Q:\Vancouver\2019\316001\16\000\CADD\Xref\xLSSheet.dwg

Copyright © WSP USA Inc. All Rights Reserved.

NOTES:
1. ENGINEERED WOOD FIBER SURFACING - FINISH ELEVATION TO BE 1-INCH ABOVE ADJACENT GRADES.
2. EDGING LOGS: 6-INCH DIAMETER AND 2, 4, AND 6-FOOT SECTIONS LONG, PIN WITH REBAR A MIN. 12-INCH DEPTH, 8- INCHES FROM EACH END OF LOG TO PREVENT MOVEMENT. COUNTER SINK PIN 1" AND PLUG WITH WOOD DOWEL.
3. LENGTH OF LOG EDGING VARIES, ADJUST LENGTH TO FIT CURVES.

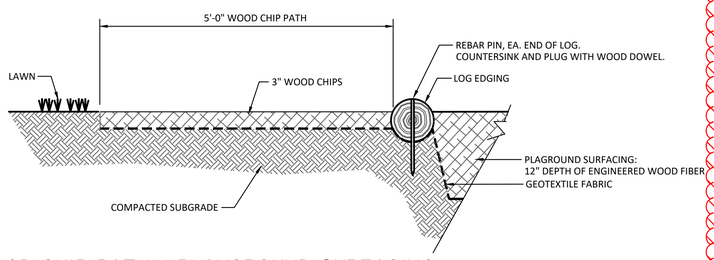

1 WOOD CHIP PATH / PLAYGROUND SURFACING
SCALE: NOT TO SCALE

NOTES:
1. REFER TO L-101 FOR CONTROL POINTS FOR PLACEMENT OF PLAY FEATURES.
2. PLAY AREAS TO ACCOMMODATE 6-FOOT FALL ZONES, ADJUST PLAY EDGES TO FIT.
3. USE LOGS AND LANDSCAPE BOULDERS TO DEFINE PLAY AREAS AND LOCATION OF WHERE DEPTH OF ENGINEERING WOOD FIBER MEETS FALL SAFETY REQUIREMENTS.

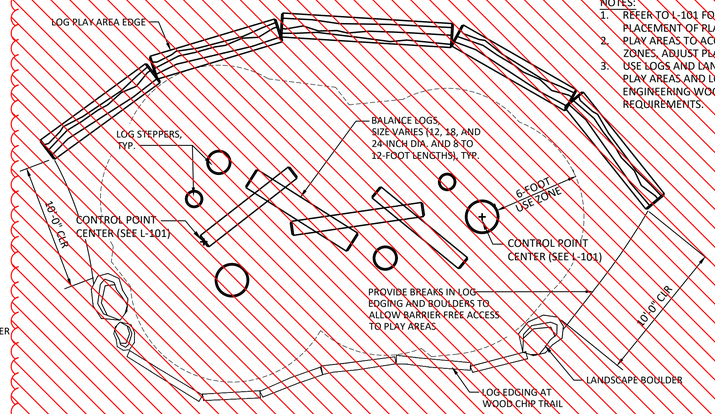

2 BALANCE LOGS - PLAN VIEW
SCALE: NOT TO SCALE

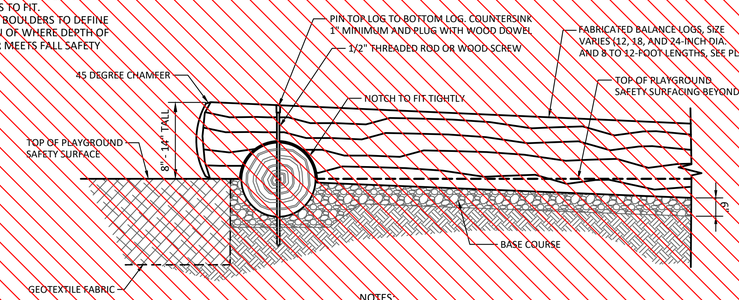

NOTES:
1. LOGS TO REST ON COMPACTED SUB-BASE WITH GRAVEL, ALL OTHER AREAS AROUND TO BE ENGINEERED WOOD CHIPS.
2. BEVEL AND SAND ALL CUT EDGES TO REMOVE ALL SHARP EDGES.

3 BALANCE LOGS - SECTION VIEW
SCALE: NOT TO SCALE

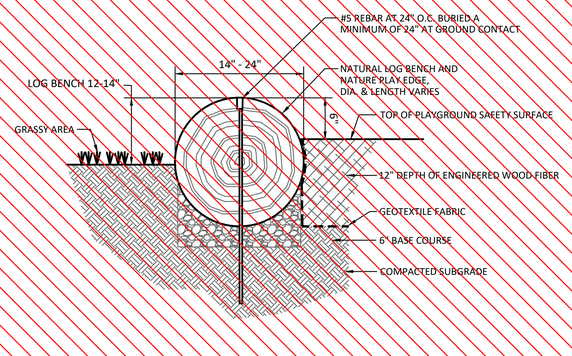

4 NATURAL LOG BENCH/PLAY AREA EDGE
SCALE: NOT TO SCALE

SHADED OBOJECTS
NOT INCLUDED
IN SCOPE OF PROJECT

NOTES:
1. REFER TO PLANS FOR LOCATION OF WOODY DEBRIS.
2. MAY VARY WITH / WITHOUT ROOT WADDLES FOR NATURAL LOOK , SIZE TO BE 12-28 FEET LONG WITH A MINIMUM OF 12-INCH DIAMETER.
3. LOGS TO BE BURIED MINIMUM 1/3RD OF LOG DIAMETER TO SECURE FROM MOVEMENT. BACKFILL AND COMPACT AROUND EDGES.
4. CHAMFER ALL CUT EDGES (1/2").

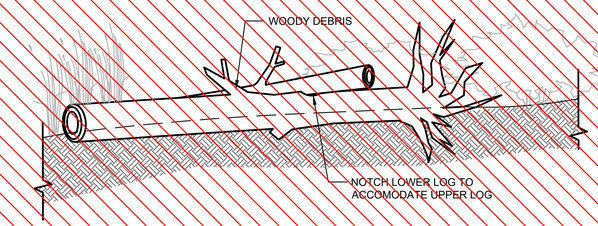

6 WOODY DEBRIS
SCALE: NTS

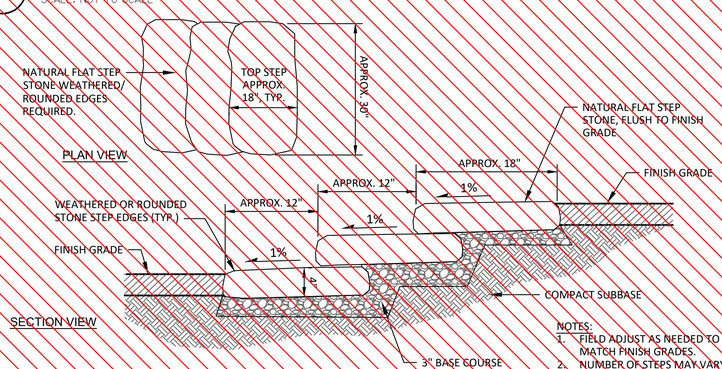

NOTES:
1. FIELD ADJUST AS NEEDED TO MATCH FINISH GRADES.
2. NUMBER OF STEPS MAY VARY.

7 STONE SLAB STEPS DETAIL
SCALE: NTS

SCALE: NOT TO SCALE

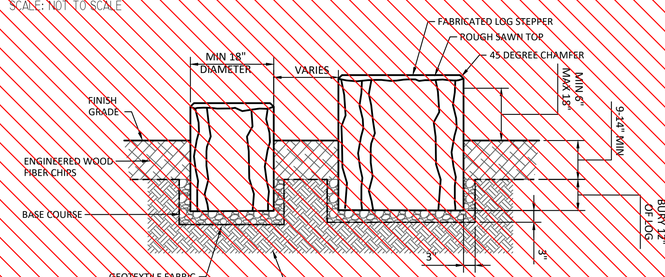

NOTES:
1. STUMPS BETWEEN 6" TO 14" TOTAL HEIGHT (TYP) FROM FINISH GRADE.
2. LOGS SHOULD BE EVENLY SET ON BASE WITH NO TIPPING OR ROCKING MOTION.
3. LOGS SHALL BE STRIPPED OF ALL BARK AND TREATED FOR DECAY RESISTANCE.
4. DIMENSIONS BETWEEN LOGS MAY VARY AND SHOULD NOT HAVE GAPS BETWEEN 3 1/2" TO 9" TO AVOID ENTRAPMENT.

8 LOG STEPPERS - SECTION
SCALE: NOT TO SCALE

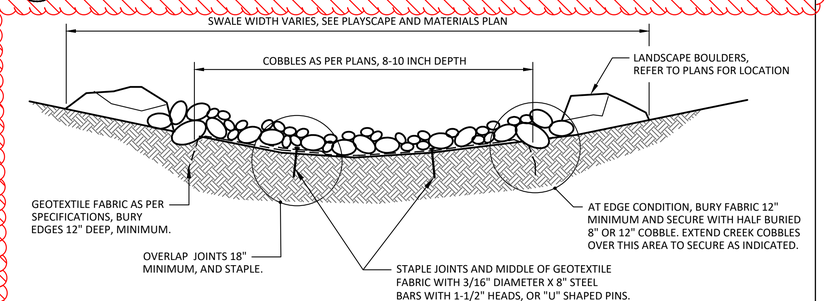

9 DRY CREEK BED
SCALE: NTS

100% SUBMITTAL

811 Know what's below. Call before you dig.

CITY OF Wood Village

PUBLIC WORKS

WSP USA Inc.
210 East 13th Street Ste 300
Vancouver, WA 98660-3231
FAX: 360-823-6101
TEL: 360-823-6100

STATE OF WASHINGTON — DAVID L. SACHARD — 40-957 EXP. 12/27/2019 — LICENSED LANDSCAPE ARCHITECT

HAWTHORNE TRAILHEAD & NATURE PLAYGROUND

SITE DETAILS

DESIGNED:	DES
DRAWN:	DRW
DATE:	07/21/2020
	8 OF 13
	L-104

Last Saved by: USJB675350 on Dec 5, 2019 4:37 PM - File: Q:\Vancouver\2019\316001\6000\CADD\Xref\LESSheet.dwg

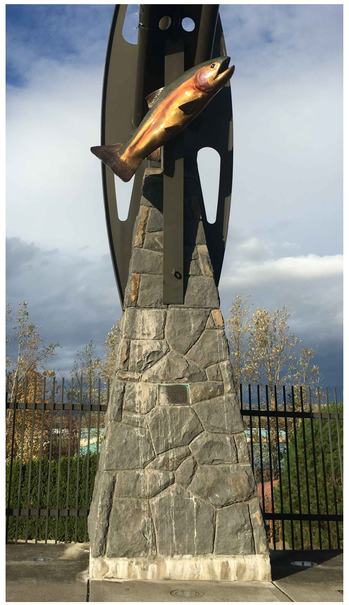

CONCEPT IMAGE

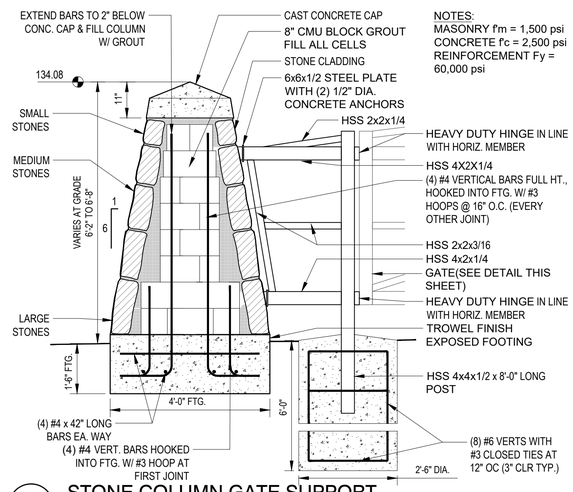

NOTES:
MASONRY f'm = 1,500 psi
CONCRETE f'c = 2,500 psi
REINFORCEMENT Fy = 60,000 psi

4 STONE COLUMN GATE SUPPORT

NTS 3200-32

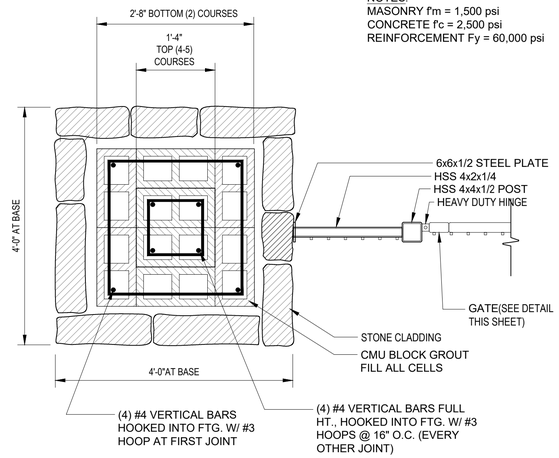

NOTES:
MASONRY f'm = 1,500 psi
CONCRETE f'c = 2,500 psi
REINFORCEMENT Fy = 60,000 psi

1 STONE COLUMN AT VEHICULAR GATE

NTS 3200-30

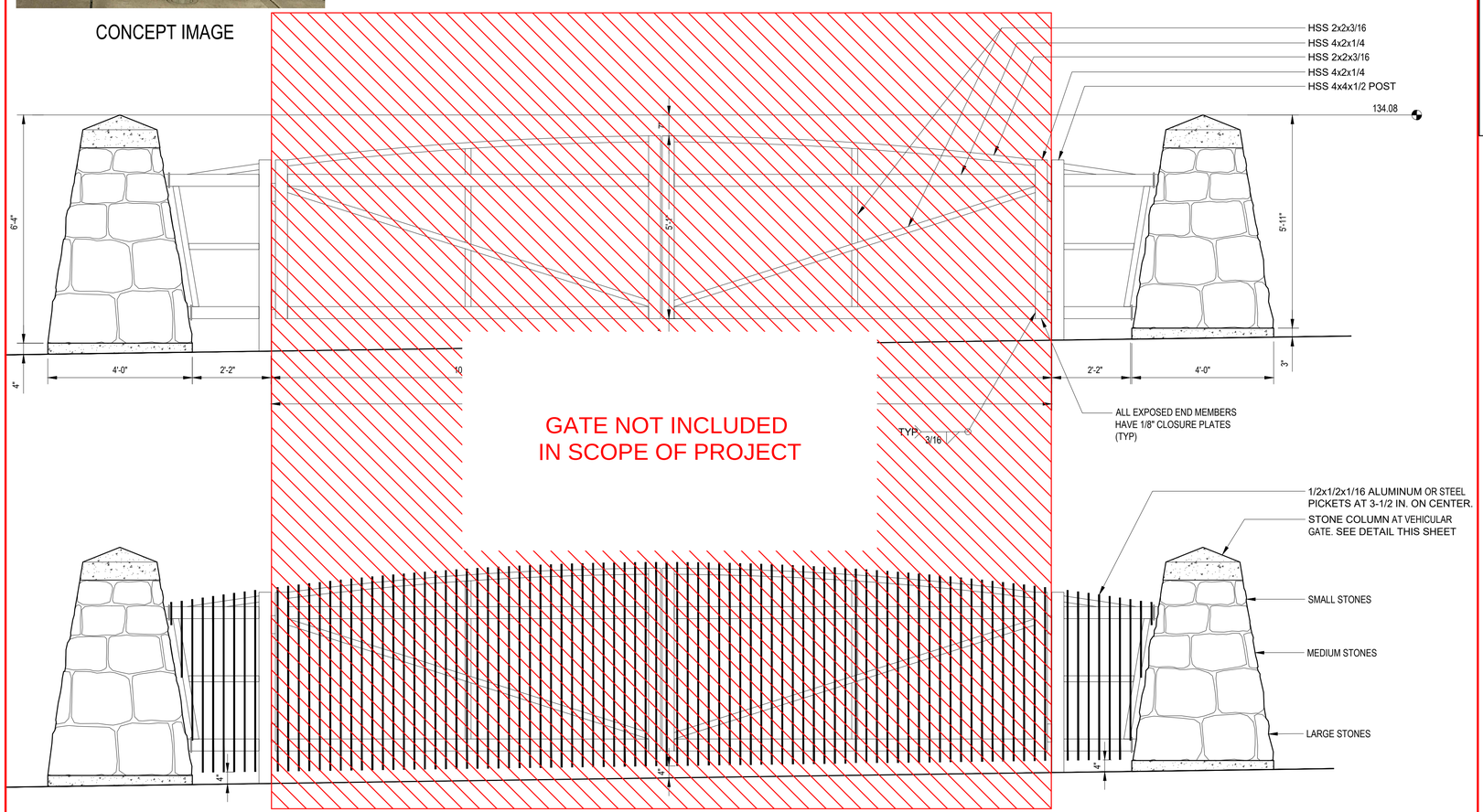

ENTRY COLUMN NOTES

1. INSTALLATION INCLUDES COLUMNS AND GATE SUPPORT. GATE TO BE INSTALLED AT LATER DATE BY CITY.
2. POSTS OF GATE SUPPORT TO BE SET 26' APART.
3. FIELD FIT TO MATCH SITE GRADE.
4. STONE CLADDING SHALL BE CORBETT BASALT.